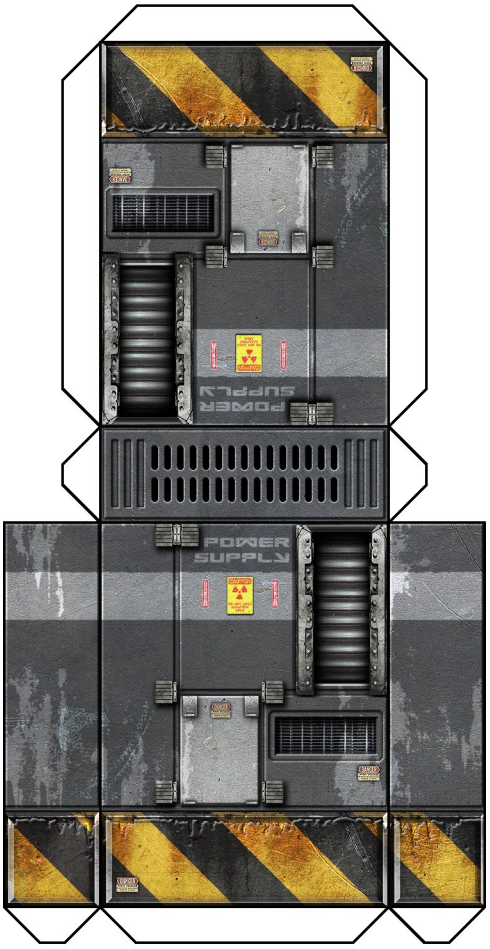

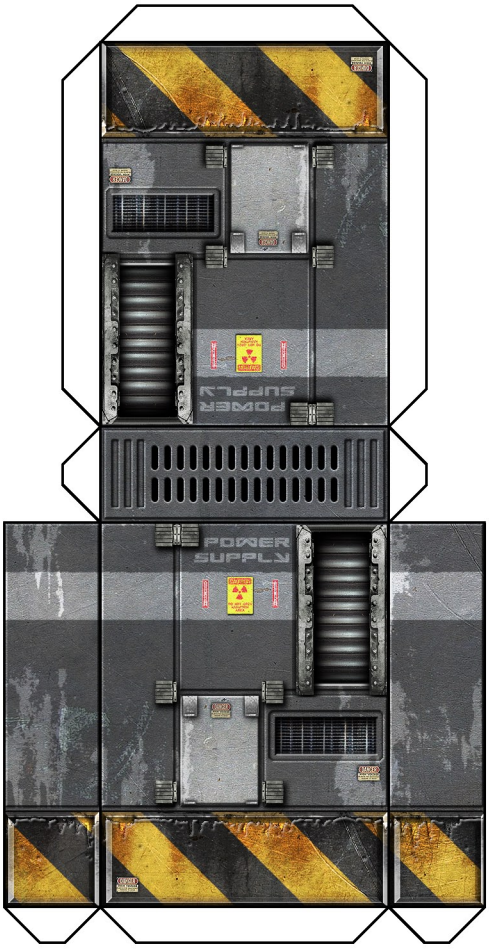

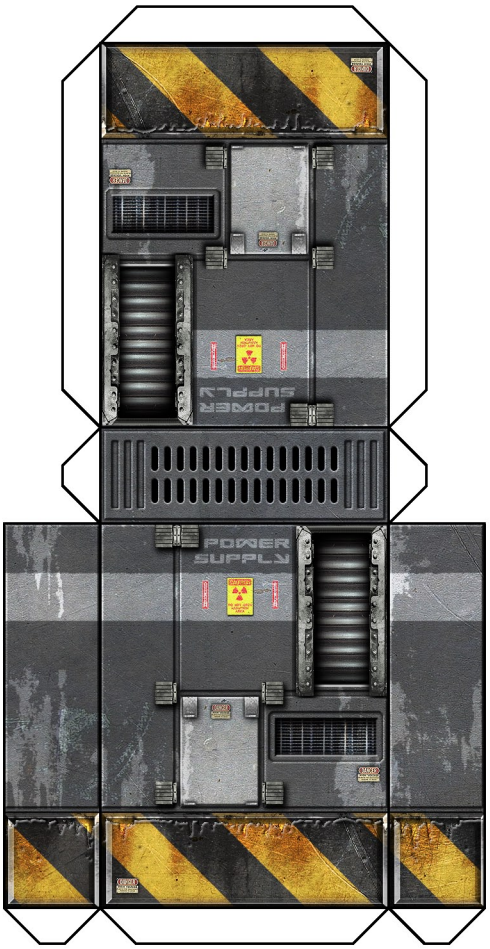

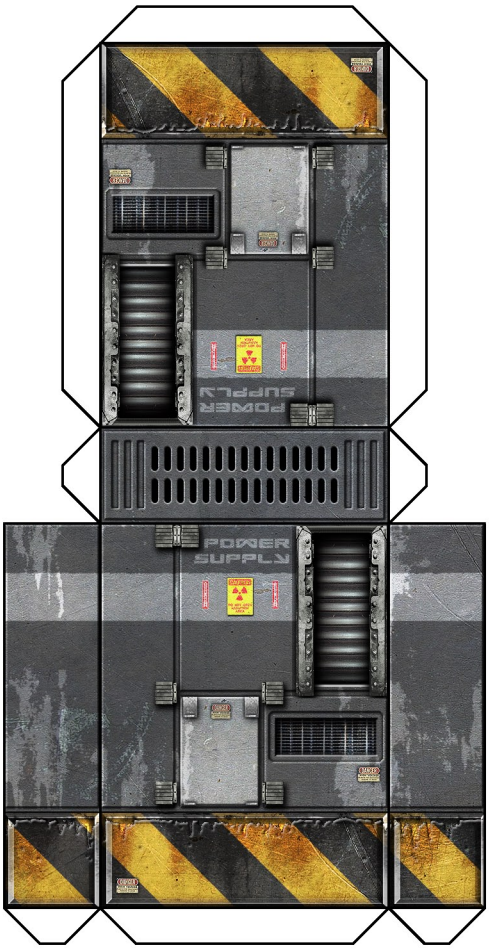

© June 2004
by Stones Edges.

STONES EDGES